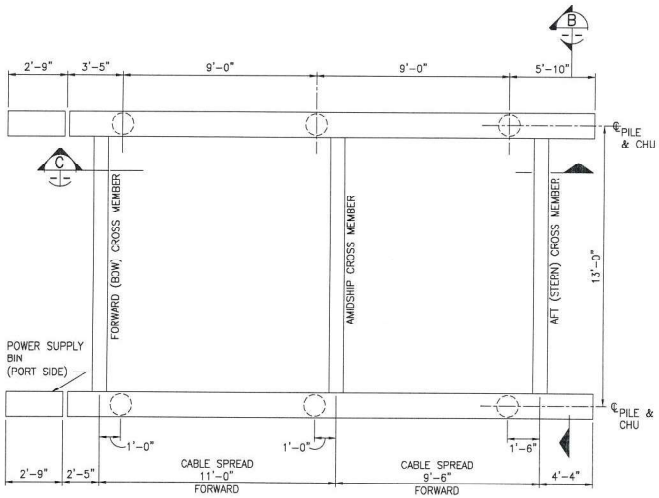

PLAN VIEW
3/8"=1'-0"

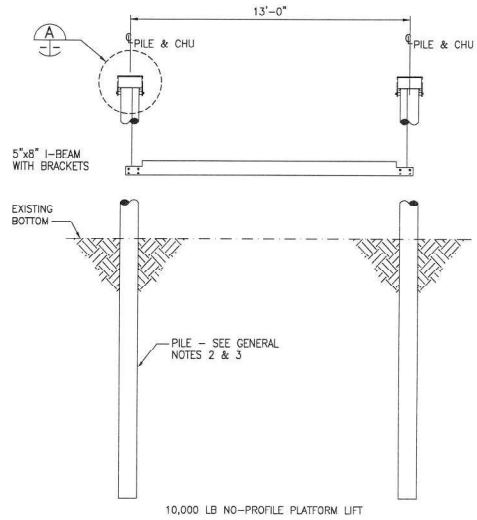

CROSS SECTION B
3/8"=1'-0"

MPH	EXPOSURE (2)	WIND PRESSURE	PILE REACTIONS (5)	
			PERPENDICULAR TO CHU (3)	PARALLEL TO CHU (4)
180	C	51.8 PSF	2600#	864#
180	D	63.0 PSF	3148#	1049#
170	C	46.2 PSF	2319#	770#
170	D	56.2 PSF	2808#	936#
160	C	41.0 PSF	2054#	683#
160	D	49.7 PSF	2487#	829#
150	C	36.0 PSF	1806#	600#
150	D	43.7 PSF	2186#	728#
140	C	31.4 PSF	1573#	522#
140	D	38.1 PSF	1904#	635#
130	C	27.0 PSF	1356#	450#
130	D	32.8 PSF	1641#	547#
120	C	23.0 PSF	1155#	384#
120	D	28.0 PSF	1398#	466#

WIND LOADS
NTS

NOTES:

1. THE ALUMINUM BOAT HOIST STRUCTURE HAS BEEN DESIGNED FOR 180 MPH, RISK CATEGORY II EXPOSURE D.
2. EXPOSURE C APPLIES TO WATER EXPOSURE FOR AN UPWIND DISTANCE BETWEEN 1,500 AND 5,000 FEET. EXPOSURE D APPLIES TO WATER EXPOSURE FOR AN UPWIND DISTANCE OF 5,000 FEET OR GREATER.
3. WIND SPEED APPLIED TO 200 SQUARE FOOT SURFACE AREA AND DISTRIBUTED TO 4 PILES SUPPORTING THE BOAT CRADLE.
4. WIND PRESSURE APPLIED TO 100 SQUARE FOOT SURFACE AREA AND DISTRIBUTED TO 6 PILES.
5. PERPENDICULAR & PARALLEL PILE REACTIONS ARE NOT APPLIED SIMULTANEOUSLY.

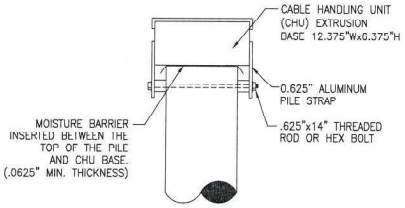

PILE CONNECTION DETAIL A
1 1/2"=1'-0"

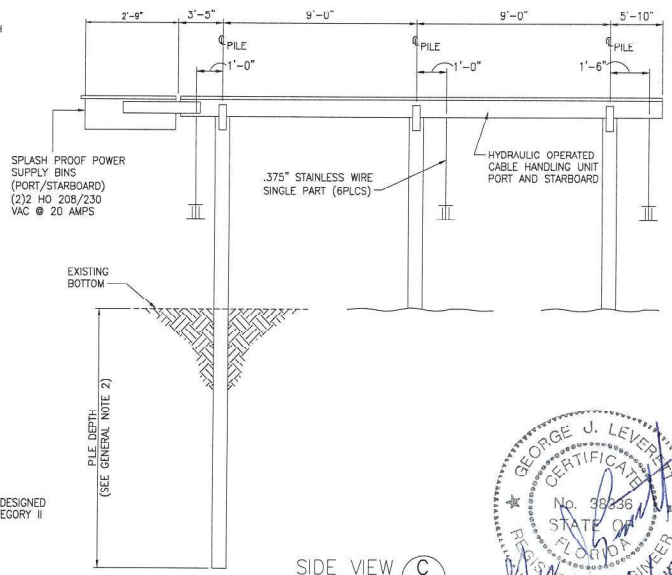

SIDE VIEW C
3/8"=1'-0"

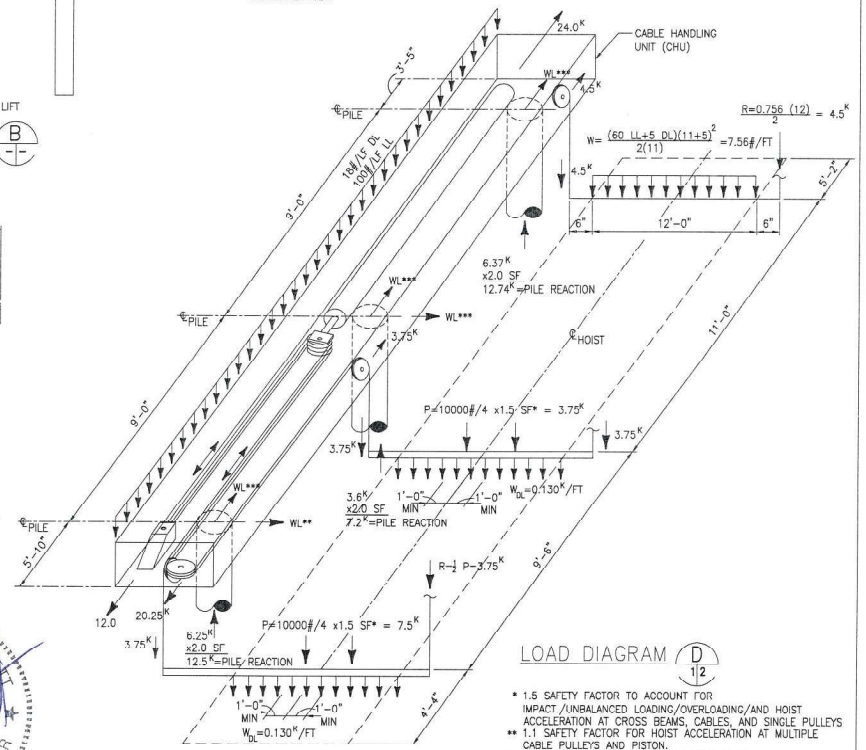

LOAD DIAGRAM D
1|2

* 1.5 SAFETY FACTOR TO ACCOUNT FOR IMPACT /UNBALANCED LOADING/OVERLOADING/AND HOIST ACCELERATION AT CROSS BEAMS, CABLES, AND SINGLE PULLEYS
** 1.1 SAFETY FACTOR FOR HOIST ACCELERATION AT MULTIPLE CABLE PULLEYS AND PISTON.
*** WL EQUALS WINDLOAD. SEE SCHEDULE ABOVE.
**** 60 PSF LIVE LOAD NOT APPLIED CONCURRENT WITH BOAT LOADS AND IS NOT A HOIST REQUIREMENT.

GENERAL NOTES:

1. ALL HARDWARE TO BE STAINLESS STEEL UNLESS OTHERWISE NOTED.
2. PILE MATERIAL, DIAMETER, AND DEPTH TO BE DETERMINED BY GEOTECHNICAL ENGINEER RETAINED BY THE GENERAL CONTRACTOR BASED ON LOCAL SOIL CONDITIONS.
3. IF WOOD PILING IS USED, IT SHALL BE TREATED WITH 2.5lb CCA. IF STEEL PILING IS USED, A CATHODIC ISOLATION BARRIER SHALL BE PROVIDED BETWEEN THE STEEL PILE AND THE ALUMINUM CHU.
4. APPROVED CONTRACTOR SHALL DETERMINE SUITABILITY OF THE EXISTING STRUCTURES AND VERIFY ALL DIMENSIONS.
5. APPROVED CONTRACTOR IS RESPONSIBLE FOR ALL MEANS, METHODS, SEQUENCES AND PROCEDURES.
6. LIFT DESIGNED PER FLORIDA BUILDING CODE 6TH EDITION (2017).
   a) DECK LIVE LOAD = 60 PSF.
   b.) WIND LOAD–THE ALUMINUM BOAT HOIST STRUCTURE HAS BEEN DESIGNED PER ASCE 7-10 SOLID SIGN CRITERIA FOR 180 MPH, RISK CATEGORY II EXPOSURE D.
   c.) SEE TABLE FOR PILE REACTIONS FOR LATERAL WIND LOADS OF VARYING SPEEDS AND EXPOSURE CLASSIFICATIONS.
   d.) HOIST LIVE LOAD = 10,000 POUNDS

GEORGE J. LEVERETT CERTIFICATE No. 38336 STATE OF FLORIDA REGISTERED ENGINEER

GEORGE J. LEVERETT
FLORIDA P.E. 38336

GEORGE J. LEVERETT PE
STRUCTURAL ENGINEERING, LLC
3606 RIVER HALL DRIVE JACKSONVILLE FL, 32217
CERTIFICATE OF AUTHORIZATION No 26761
(904) 923-5407

GEORGE J. LEVERETT, P.E
FL PE# 38336

NO PROFILE BOAT LIFT		10,000 lb PLATFORM
SCALE: AS NOTED	APPROVED BY:	DRAWN BY: APN
DATE: 01/01/18		REVISED:
OWNER		
ADDRESS		WMD BKPL PERM